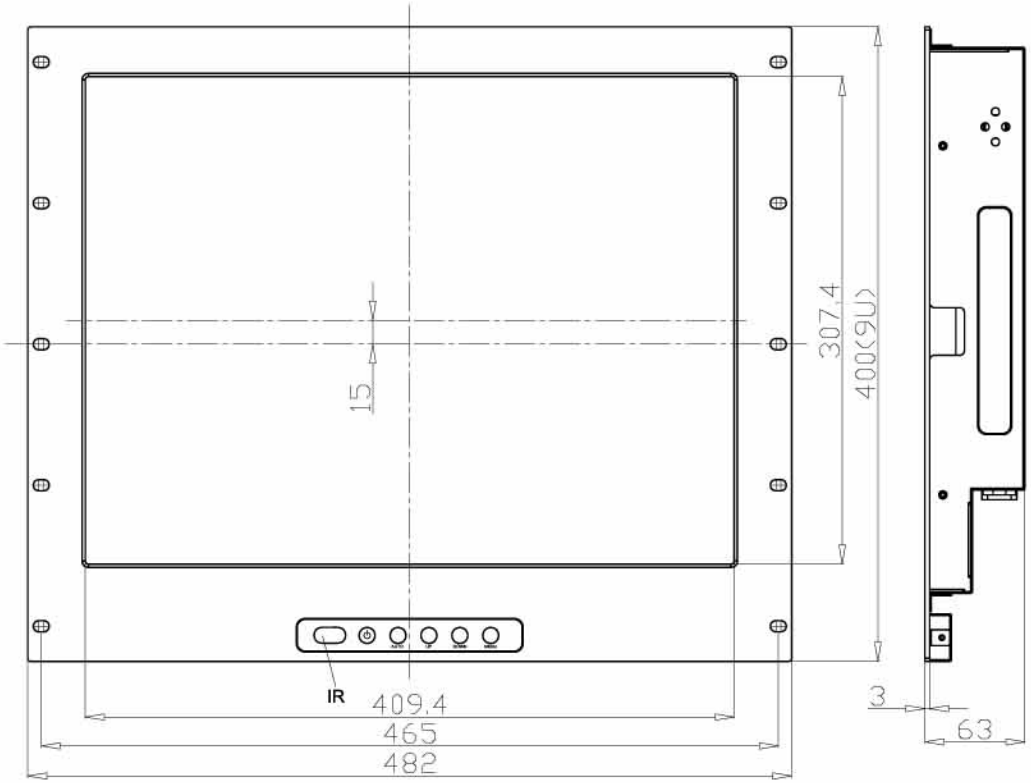


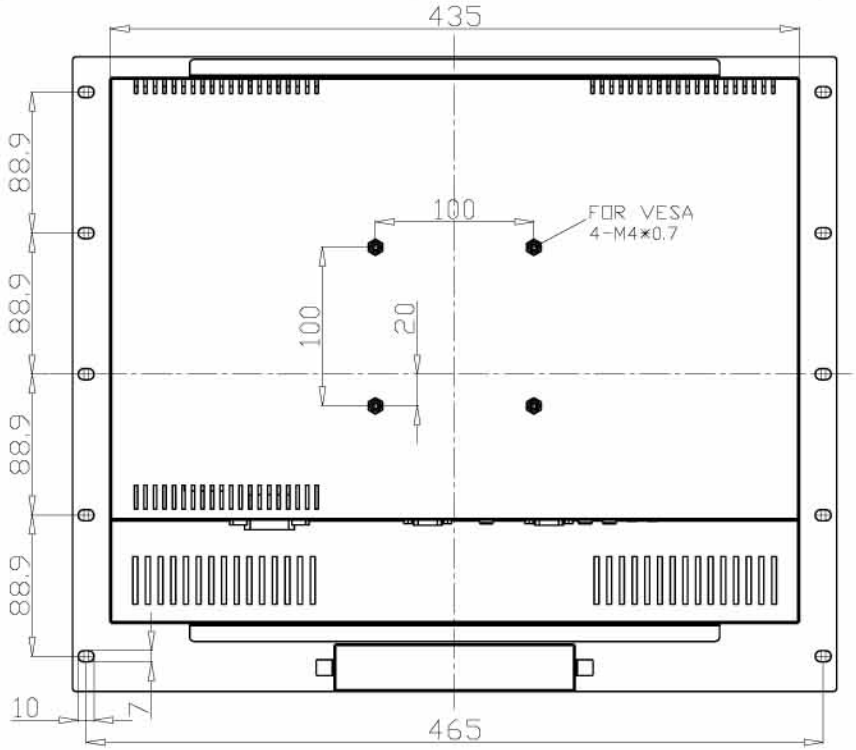


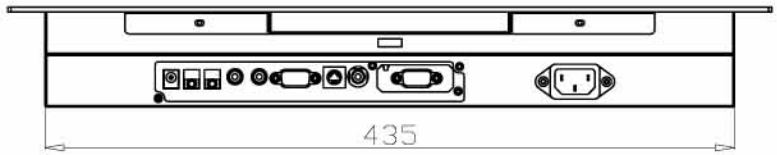


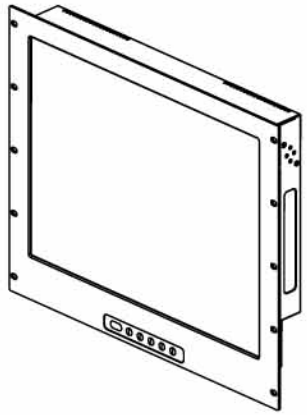

| | | | | | | | | | |
|---|---|---|---|---|---|---|---|---|---|
| AD/BOARD | | MODEL | RM2007 | | | | | | |
| INVERTER | | | | | | | | | |
| KEY PAD | | PART NO. | | | PART NAME | assembly | | SCALE | 1:1 |
| PANEL: AU-M201UN02V2 LG-LM201U05-SLA1 | | MATERIAL | | DATE 2009-12-09 | APRROVED | | DRAWN JACK | UNIT | MM |