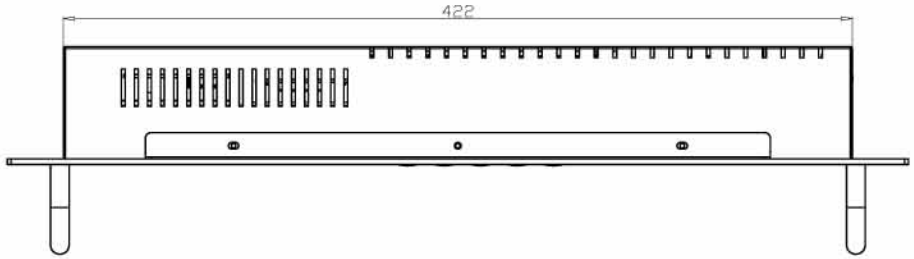

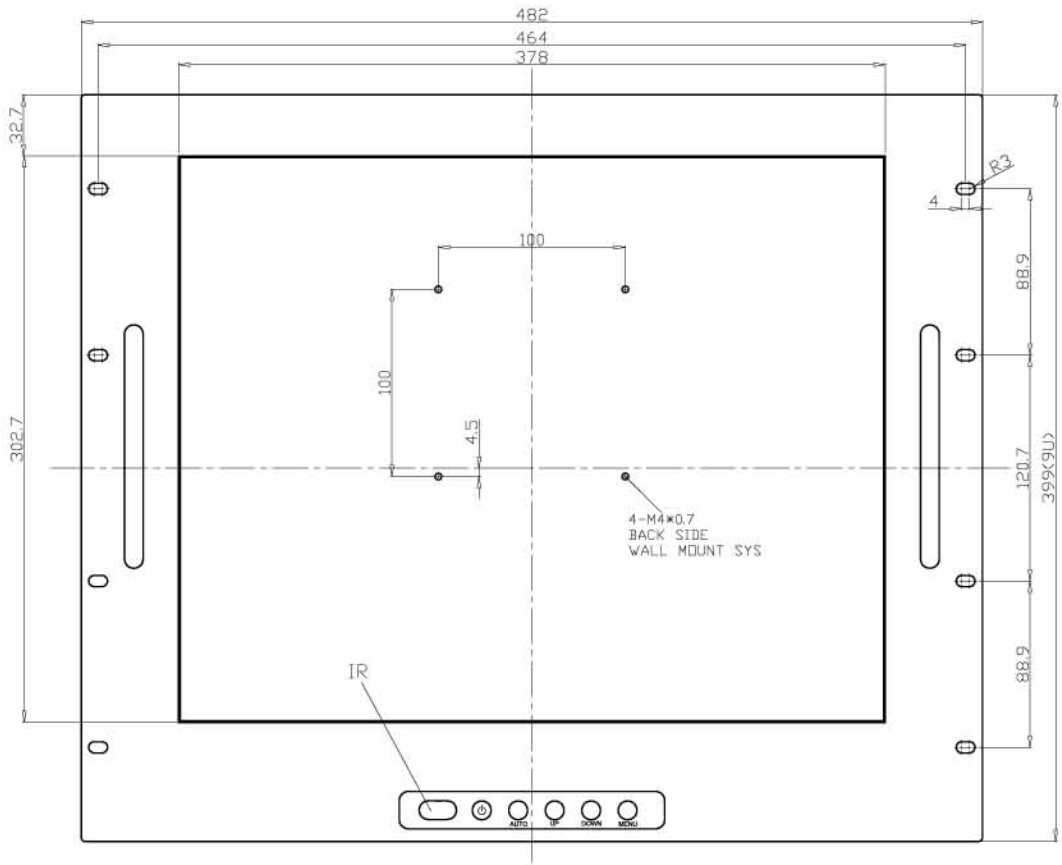

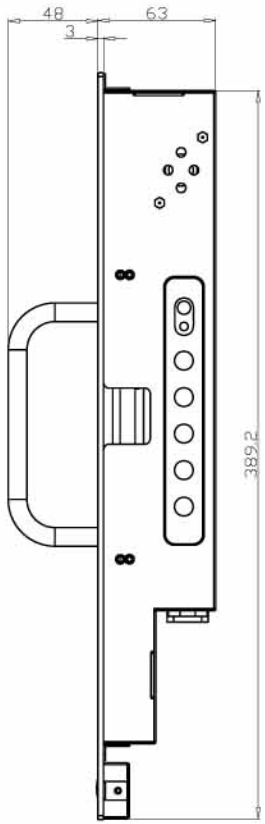

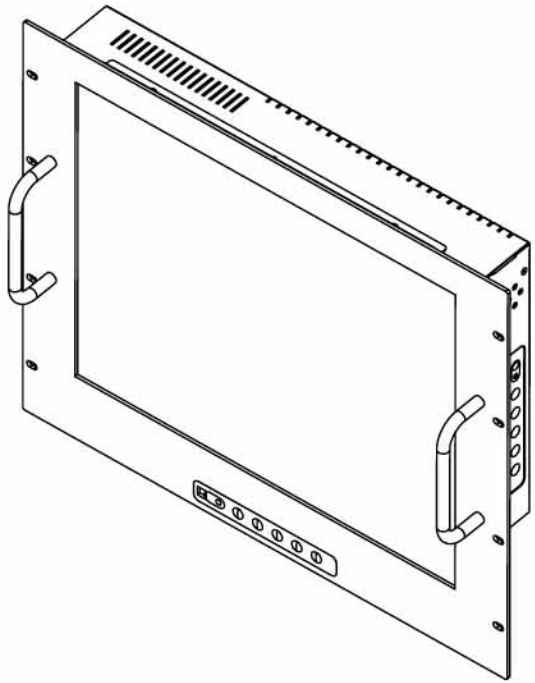

P.S:1.前殼、後殼與後蓋組合鎖附後一起烤漆.
2.表面黑纖紋烤漆.

AD/BOARD	2023L/2023-9906/2523TTL/2523BVL
INVERTER	TIP017WS-01
KEY PAD	PCBKEY019A0
PANEL:	AU-M190EN04 V7 PS v0.2 AU-M190EG01 V0 PS v0.4 CMO-M190E5-L0B LG-LM190E08-TLL2

MODEL	RM1905		
PART NO.			
MATERIAL	SECC	DATE	09/25/2007

PART NAME	ASSEMBLY		
APRROVED		DRAWN	JACK
REV.	A		
DWG SIZE	A4		