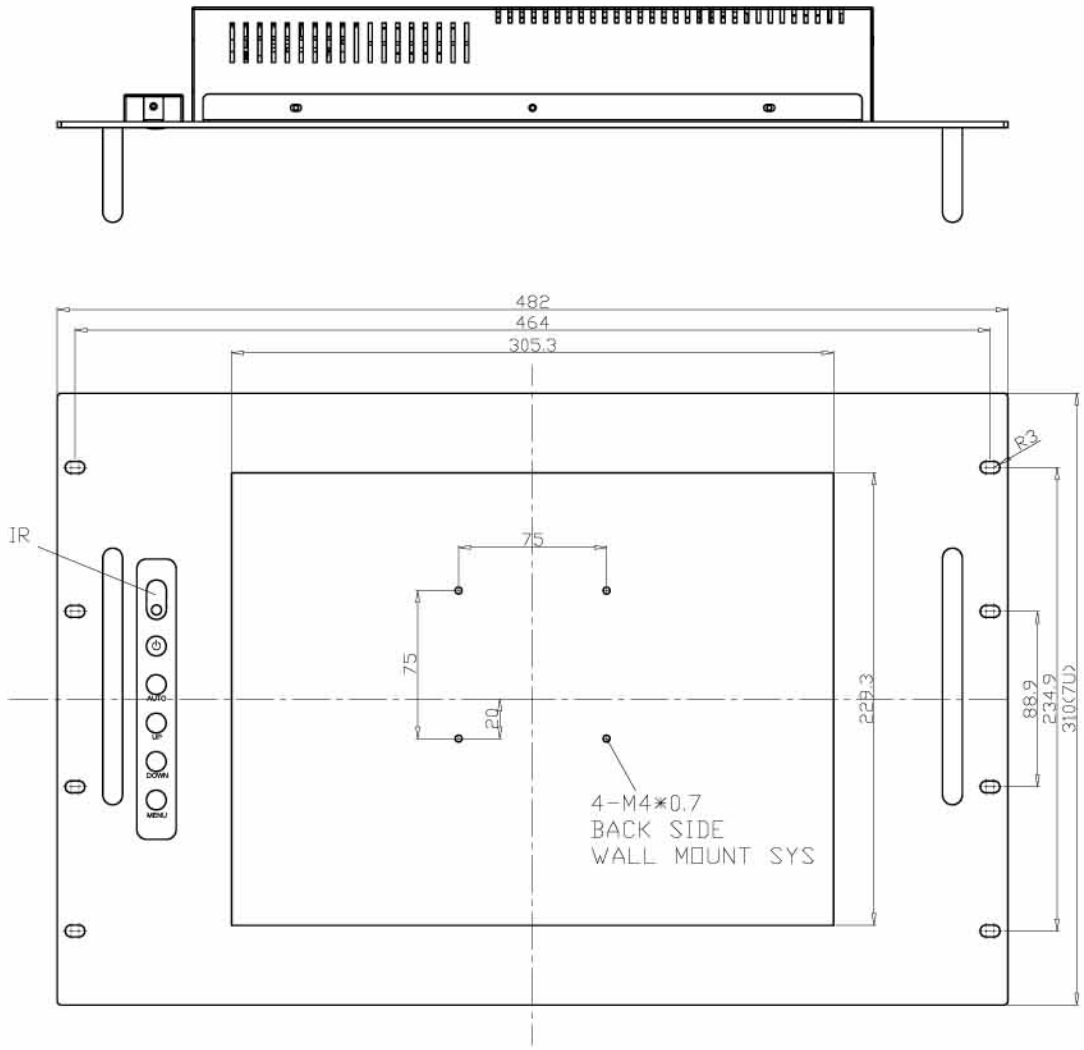

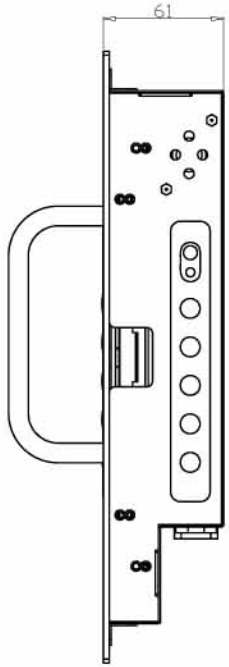

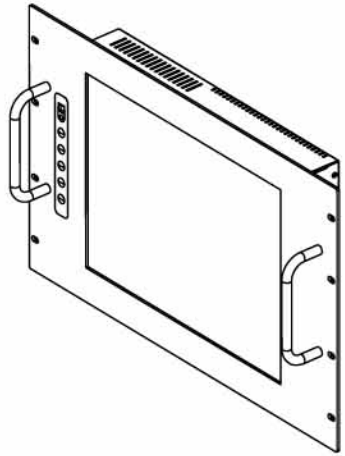

P.S:1.前殼、後殼與後蓋組合鎖附後一起烤漆.
2.表面黑織紋烤漆.

AD/BOARD	2023L/2023-9906/2523TTL/2523BVL	MODEL	RM1505		
INVERTER	TIP017WS-01				
KEY PAD	PCBKEY019A0	PART NO.		PART NAME	ASSEMBLY
PANEL:	CMO-G150X1-L01_Approval_spec_ver._2.1_01 CMO-V150X1-L01 Approval Specification Ver2.0 AU-M150XN07 V.2-PS-2005.03.28 YS-150MS02 Sharp-LQ150X1LCD3	MATERIAL	SECC	DATE	09/18/2007
				APRROVED	DRAWN JACK

REV. B
DWG SIZE A4