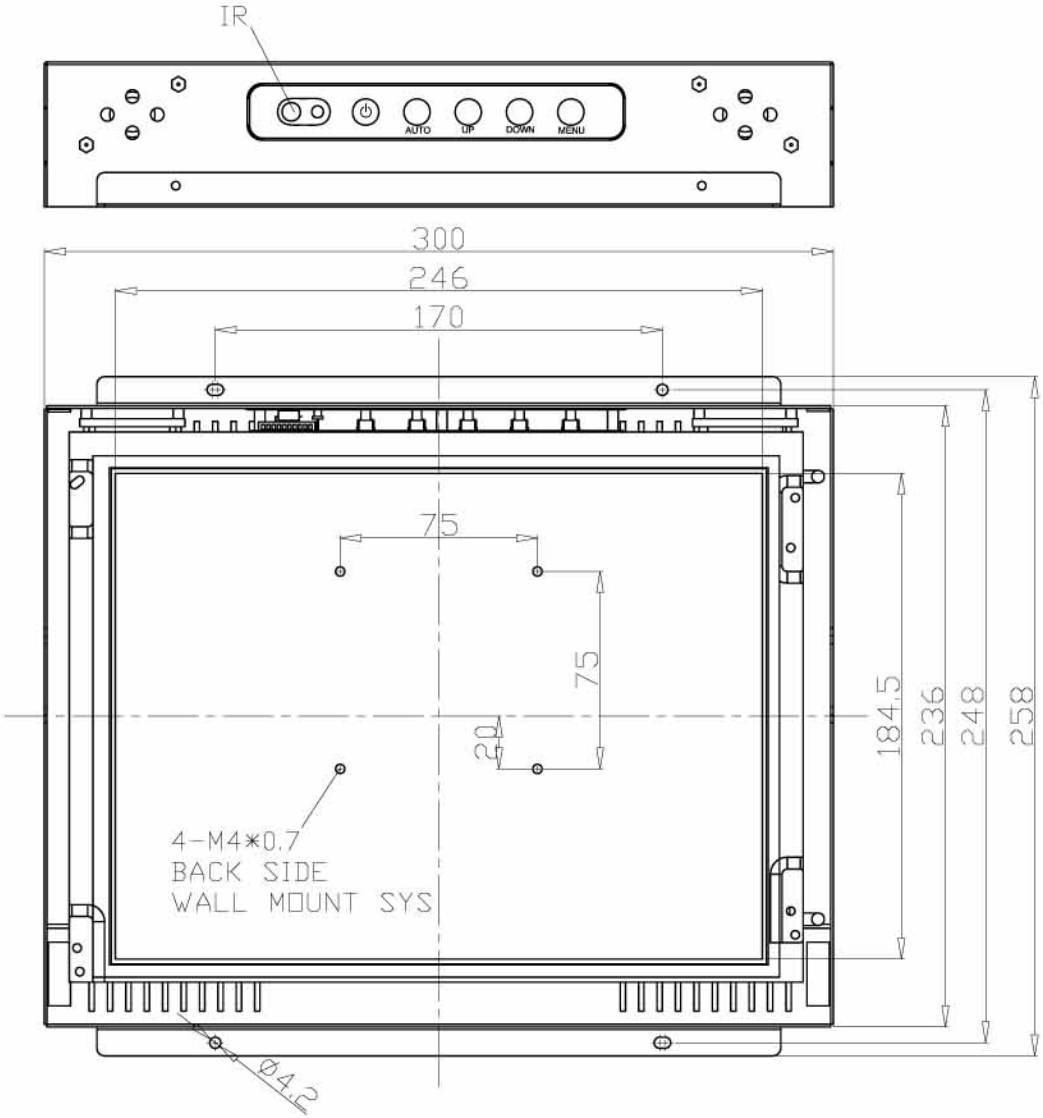

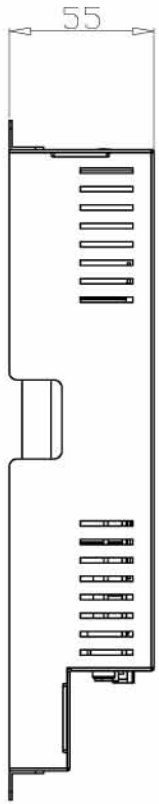

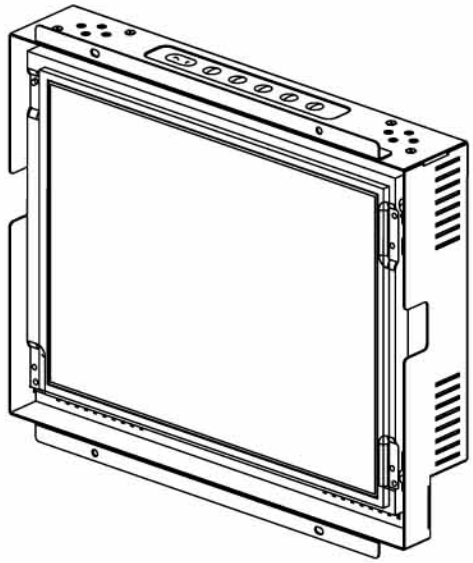

DVI READY

P.S:1.前殼、後殼與後蓋組合鎖附後一起烤漆.
2.表面黑織紋烤漆.
3.The attention please,if panel is the CMO or TOSHIBA.
The panel-bk right side need rubber washer 1mm.

AD/BOARD	2023L/2023-9906	MODEL	OF1205		
INVERTER	TIP017WS-01				
KEY PAD	PCBKEY019A0	PART NO.		PART NAME	Assembly
PANEL: AU-G121SN01, CMO-G121X1-L01, SHARP-LQ121S1DG61_SP_012706, TOSHIBA-LTD121LA#SG		MATERIAL	SECC	DATE	10/15/2007
		APRROVED		DRAWN	JACK
		REV.	A	DWG SIZE	A4